Experiment No. 6

OBJECT

To determine the height of a water tank with help of a sextant.

APPARATUS

A sextant with a rigid clamp stand, a measuring tape and chalk pieces of two different colours.

FORMULA

The height of the given object (like water tank, tower, building etc.) is given by

$$H = h' + \frac{x}{\cot\theta_1 - \cot\theta_2} = h' + h \qquad \text{....(1)}$$

Where h' is the height of the chalk mark above the ground,

h is the height of the object water tank above the chalk mark.

x is the distance between two points at which the angles of elevation of the top of the object are θ_1 and θ_2 respectively and

THEORY

Let h' be the height of the chalk mark above the ground and h be the height of the object above the chalk mark.

Let θ_1, θ_2 and θ_3 be the angles subtended by the top of the object water tank at points A, B and C respectively.

Let x_1, x_2 and x_3 be the distances from point D (the chalk mark on the object) perpendicular to the plane DE of the object water tank, to the points A, B and C as shown in Fig. 1.

In Δ EDA

$$\tan\theta_1 = \frac{ED}{DA} = \frac{h}{x_1} \qquad \text{.....(2)}$$

In Δ EDB

$$\tan\theta_2 = \frac{ED}{DB} = \frac{h}{x_2} \qquad \text{.....(3)}$$

In Δ EDC

$$\tan\theta_3 = \frac{ED}{DC} = \frac{h}{x_3} \qquad \text{.....(4)}$$

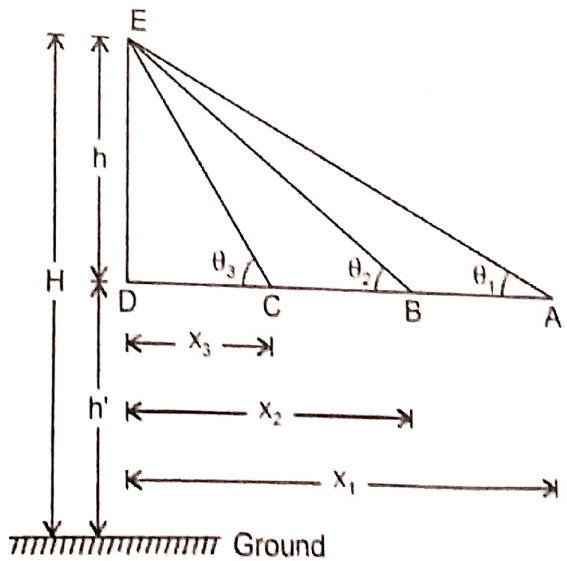

Fig. 1.1

From equation (2) and (3), we have

$$x_1 - x_2 = \frac{h}{\tan\theta_1} - \frac{h}{\tan\theta_2} = h\cot\theta_1 - h\cot\theta_2$$

$$x_1 - x_2 = h(\cot\theta_1 - \cot\theta_2)$$

$$h = \frac{(x_1 - x_2)}{\cot\theta_1 - \cot\theta_2} = \frac{x'}{\cot\theta_1 - \cot\theta_2} \quad ....(5)$$

Where x′ is the distance between two observation points A and B.

From equation (3) and (4), we have

$$x_2 - x_3 = \frac{h}{\tan\theta_2} - \frac{h}{\tan\theta_3} = h\cot\theta_2 - h\cot\theta_3$$

$$x_2 - x_3 = h(\cot\theta_2 - \cot\theta_3)$$

$$\Rightarrow \quad h = \frac{(x_2 - x_3)}{\cot\theta_2 - \cot\theta_3} = \frac{x''}{\cot\theta_2 - \cot\theta_3} \quad .....(6)$$

Where x″ is the distance between two observation points B and C

Similarly

$$h = \frac{x_1 - x_3}{\cot\theta_1 - \cot\theta_3} = \frac{x'''}{\cot\theta_1 - \cot\theta_3} \quad ....(7)$$

Where x‴ is the distance between two observation points A and C

The average value of equations (5), (6) and (7) will give the more accurate value of h,hence the height of the object is

$$H = h' + h \quad ....(8)$$

To determine the h, the distances x's and the elevation angles θ′s of various observation points, are required to measure. To measure the angle of elevation, the apparatus sextant is used.

Sextant

This is an instrument to measure the angular separation between two distant objects or the altitude of heavenly bodies.

(a) Construction

It consists of a graduated circular arc (NQ) of about 1/6 part of the circumference of a circle supported by two fixed radial arms ON and OQ which meet at a point O which is the centre of the circle of which the arms form a part. There is third moving arm OP known as index arm, which moves over the circular graduated scale. It carries a vernier scale or micrometer scale at one end and a plane mirror M_1 (called as index mirror) perpendicular to the plane of scale at another end. This arm is fitted with clamp and tangent screw, so that it can be adjusted in any desired position.

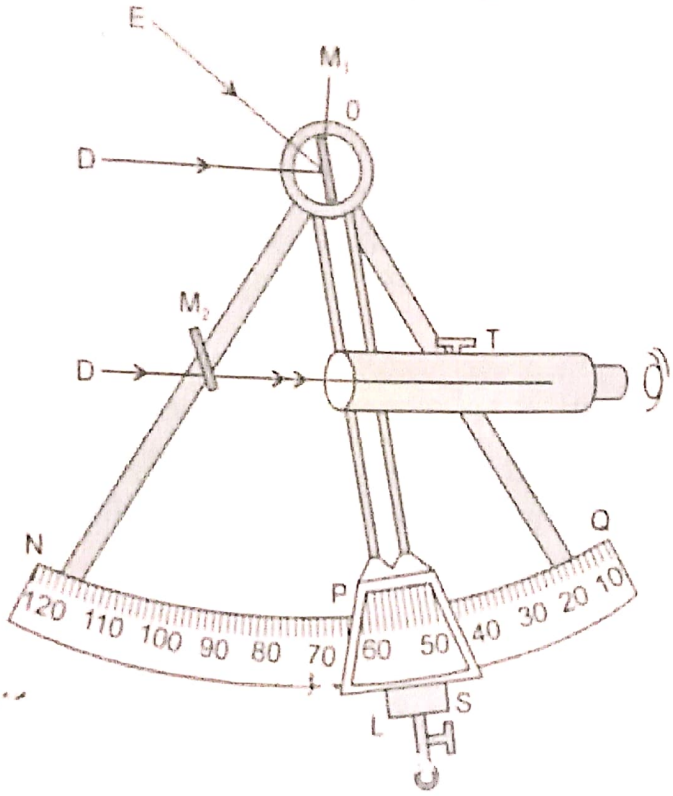

Fig. 2

A second mirror M_2, whose half portion is transparent is called the horizon mirror. It is fixed on the radial arm ON with its plane perpendicular to the plane of the scale in such a manner that when the index arm is at zero, this is parallel to the index mirror M_1.

A telescope (T) is fixed to the arm OQ with its axes perpendicular to horizon mirror M_2. The telescope receives the direct rays through the transparent portion of mirror M_2 and the twicely reflected rays from M_1 and M_2.

(b) Principle of Working

To find the angular separation between two distant points D and E, the reading of the vernier is noted when the image of D as seen direct through the transparent portion of horizon mirror M_2 overlaps or coincides or at the same level of the image formed after reflection from mirror M_1 and then mirror M_2. It is shown in Fig. 3. The index arm OP is rotated till the image of point E as seen after successive reflections from mirror M_1 and M_2 overlaps or coincides with the image of D as seen direct through the transparent portion of mirror M_2. This reading of the scale is again noted down. It is shown in Fig. 4.

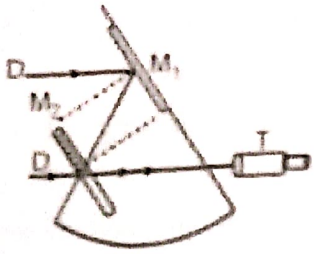

Fig. 3

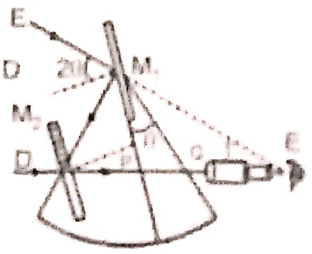

Fig. 4

The angular separation between points D and E is equal to twice the angle through which the mirror M_1 has been rotated. To facilitate a direct reading from the scale, the circular arm is graduated in half degrees although markings are in degrees. Such markings are called sextant degrees. Thus circular arm NQ which has 60° is marked 120°.

PROCEDURE

1. Find the least count of the sextant.
2. Mark a horizontal line with a coloured chalk at the eye level of the observer on the vertical wall of the object. Note down the distance of this line from ground, which gives h′.
3. Place the sextant at a fairly large distance away from the object. Mark this position on the ground (say C). This will be the first point of observation. Measure its distance from the object, it is x_3.
4. Clamping the sextant with a rigid stand (or holding the sextant, if it is not fitted with stand) with the scale downwards, the objective of the telescope is focussed horizontally towards the horizontal chalk mark, which is seen in the left half of the field of view. This is the direct image as seen in the telescope.
5. Now move the index arm OP while seeing the horizontal chalk mark continuously in left half so that same horizontal chalk line is also seen in the right half of the field of view. Adjust with the help of vernier, so that the horizontal chalk lines of same colours of the two halves are at the same level or coincide.
6. Note down the reading of the sextant. This is the zero reading and it should coincide with the zero of main scale. If not so, note down the zero with proper sign.
7. Now rotate the index arm so that the upper portion move down in the right of the field of view till the top of the object (or another coloured chalk line near the top) is seen in the right half, then adjust with the help of vernier so that the horizontal chalk lines of different colours in the left half and right half are at the same level or coincide.
8. Note down the reading. The difference of this reading and the zero reading gives the angle of elevation at that observation point (for point C, say if θ_3).
9. Now move farther from the object at another point of observation B which is x_2 distance away from the object measure the distance x_2 with measuring tape.
10. At position B, again noted down the zero reading with proper sign using procedure 4 to 6 and then repeat the above procedure 7 and 8 to find out the angle of elevation at this point B. Assume it is θ_2 as shown in Fig. 1.1.
11. Similarly for the observation point A, the distance x_1 and the angle of elevation θ_1 is observed as shown in Fig. 1.1.
12. Now calculate the height (h) of the object from a marked chalk line by using equation (1.5), (1.6) and (1.7) and get their averaged value, which when used in equation (1.8) gives the height (H) of the object.

OBSERVATIONS

1. The height of the horizontal chalk line above the ground = h' = ...
2. The least count of the sextant.
   (i) The smallest division on the main scale = y = ... (generally 1°)
   (ii) The number of division on the vernier or the number of divisions on the circular scale of the micrometer scale or drum is = N = ... (generally 60)

Thus, the least count for vernier or micrometer is = $\frac{y}{N}$ = ...

(generally it is = $\frac{1^\circ}{60} = 1'$)

The micrometer or drum is further provided with a vernier having 5 divisions (or 6 divisions) which coincide with 4 divisions (or 5 divisions) of the micrometer scale. Thus, the vernier constant $= 1 - \frac{4}{5} = \frac{1}{5}$ min. = 12″

(or the vernier constant = [illegible] in. = 10″)

Observation Table :

S. No.	Position of point of observation	Zero Reading			Elevation Reading			Angle of Elevation (θ'-θ)
		M.S.	V.S.	Total (θ)	M.S.	V.S.	Total (θ')	
1.	Position C. x_3=....m	-	-	-	-	-	-	θ_3 =...
2.	Position B. x_2=....m	-	-	-	-	-	-	θ_2 =...
3.	Position A. x_1=....m Here $x_1 > x_2 > x_3$	-	-	-	-	-	-	θ_1 =...

CALCULATIONS

From the observation table

For point A x_1 = ...m θ_1 = ...

For point B x_2 = ...m θ_2 = ...

For point C x_3 = ...m θ_3 = ...

Using equations (1.5), (1.6) and (1.7), we have

$$h = \frac{x_1 - x_2}{\cot\theta_1 - \cot\theta_2} = \ldots\ldots\ldots\ldots m$$

$$h = \frac{x_2 - x_3}{\cot\theta_2 - \cot\theta_3} = \ldots\ldots\ldots\ldots m$$

and $$h = \frac{x_1 - x_3}{\cot\theta_1 - \cot\theta_3} = \ldots\ldots\ldots\ldots m$$

and mean h = ...m

So the height of the object is = H = h′+h = ...m

The standard height of the object (given) = H′ = ...m

$$\% \text{ error} = \frac{H'-H}{H'} \times 100\% = \ldots\ldots\ldots\ldots\%$$

RESULT

1. The height of the object above the ground is = H = ...m
2. The standard height of the object above the ground is = H′=.....m
3. $\% \ error = \frac{H'-H}{H'} \times 100\% = \ldots\ldots\ldots\ldots\%$

SOURCES OF ERRORS

1. Zero reading may not found separately at different point of observations.
2. The foot and top of the object and the horizontal chalk line, all three points of observations may not in a straight line.
3. The marking of the horizontal chalk line may not at the eye level of the observer, i.e., may not in the same horizontal line as the telescope.
4. Both mirror M_1 and M_2 may not perpendicular to the plane of graduated circular arc.
5. The axis of the telescope may not pass through the centre of the horizon mirror M_2.

PRECAUTIONS

1. Plane of the index mirror M_1 and horizon mirror M_2 should be perpendicular to the plane of the arc.
2. In the zero reading, the index mirror M_1 and the horizon mirror M_2 should be parallel, i.e., the zero error correction should not be there.
3. The axis of the telescope must be parallel to the plane of the graduated circular scale and must pass through the centre of the horizon glass.
4. Zero reading must be found separately at every observation point A, B and C.
5. The foot and top of the object and the horizontal chalk line, all three points should be in a straight line.
6. The axis of the telescope should pass through the centre of the horizon mirror M_2.
7. The both mirrors M_1 and M_2 must be parallel for zero readings.